Motor Fan (L293D) w/ Arduino Programming

Materials:

- Arduino Uno
- L293D motor driver IC
- DC motors
- Breadboard
- Jumper wires
- USB cable

How it works:

The system uses an Arduino Uno to control DC motors through the L293D motor driver IC, which acts as an interface between the low-power control signals of the Arduino and the higher current required by the motors. The L293D is an H-bridge driver, allowing the motors to spin in both directions by controlling the polarity of the voltage applied to them.

The Arduino sends digital signals to the input pins of the L293D to control motor direction, while enable pins can be used with pulse-width modulation (PWM) to adjust motor speed. Because the motors require more current than the Arduino can safely supply, an external 5V power source is used to power the motors through the L293D, while the Arduino provides only the control signals.

By programming the Arduino, the user can control when the fan (motor) turns on or off, change its speed, and reverse its direction, enabling flexible and precise operation of the motor system.

Pinout:

Pin 1 & 9 (ENA, ENB): Motor enable & speed control.	**Pin 3 & 6 (OUT1, OUT2):** Outputs to Motor A terminals
→ LOW = Motor OFF, HIGH = Full speed, PWM = Speed control	**Pin 11 & 14 (OUT3, OUT4):** Outputs to Motor B terminals.
Pin 2 & 7 (IN1, IN2): Direction control inputs for Motor	**Pin 4, 5, 12, 13 (GND):** Ground pins.
Pin 10 & 15 (IN3, IN4): Direction control inputs for Motor B.	→ Provide common ground and help dissipate heat
→ Set HIGH/LOW combinations to control motor direction.	**Pin 8 (VCC2 / VS):** Motor power supply (4.5V - 36V).

Code (Arduino IDE):

GitHub Repository: https://github.com/Satamael13/Projects.git
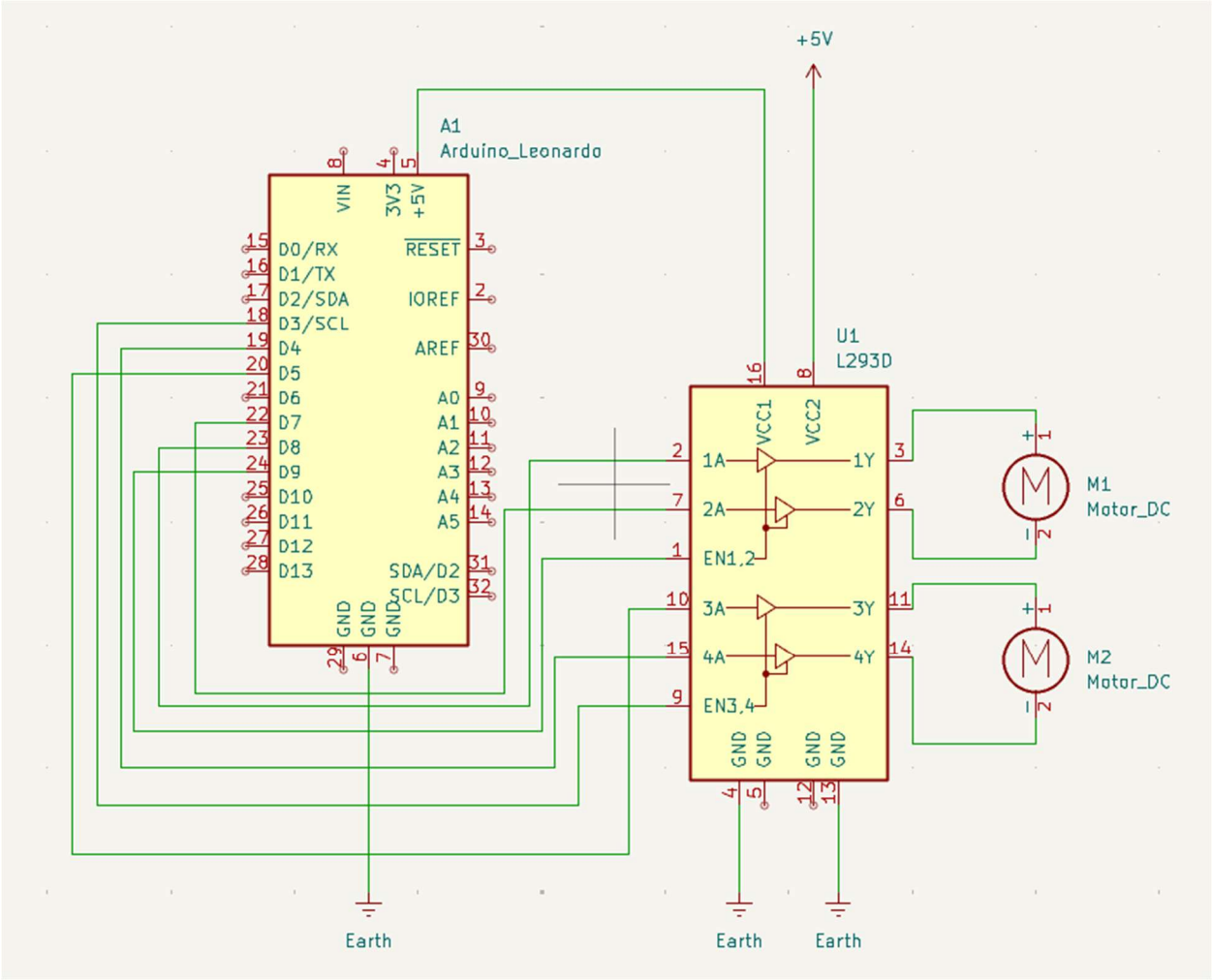
Schematic (KiCAD):